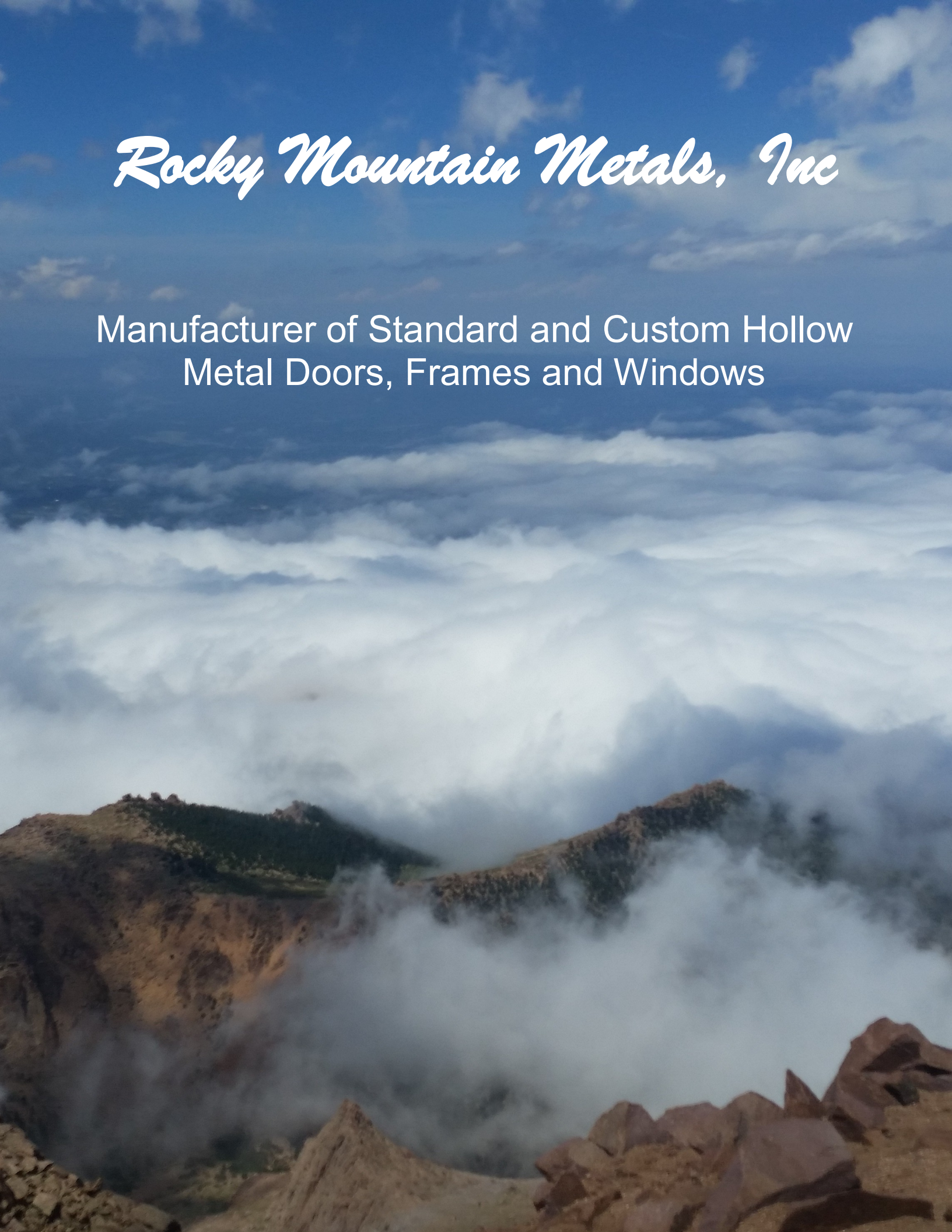
Rocky Mountain Metals, Inc
Manufacturer of Standard and Custom Hollow Metal Doors, Frames and Windows

Index

Introduction 3

List of References
- Educational 4-5
- Medical Care 6
- Municipal, Military and Governmental 7
- Corporate, Retail and Commercial 8
- Hotels 9
- Libraries and Casinos 10

Hollow Metal Doors
- General Information 11
- Door Details 12
- 1100 Polystyrene Core 13
- 1200 Steel Stiffened 14
- 1500 Lead Lined 14
- 1300 Temperature Rise 15
- 1600 Dutch Doors 16-17

Hollow Metal Frames
- General Information 18-19
- Welded Frames 20
- Knockdown (KD) Frames 21
- Pocket Frames 22
- Custom Frames 23-45

Tornado Resistant Opening 25
- 1400 FEMA Frame and Shutter 26-27
- 1400 FEMA Door and Shutter 28

Leadership in Energy and Environmental Design 29

Contact Information 30

Buy America Act 31
Certifications 31

Rocky Mountain Metals, Inc., is a manufacturer of Standard and Custom Hollow Metal Door and Frame Products located in Raton, New Mexico, just south of the Colorado border. Established in 1988, the company has over the years, supplied hollow metal products to numerous types of facilities from small offices and schools, to prestigious corporate headquarters, hospitals and exclusive hotels.

We offer excellent service with short lead times and very competitive prices. Customized and quick quoting as well as order processing through our knowledgeable and experienced staff. By the attached references, we hope that you get an understanding of not only our capabilities, but also that we are dependable and reliable. A partner you can count on.

Rocky Mountain Metals, Inc. is continually expanding capabilities, improving efficiencies and upgrading production facilities to meet today's high standards for quality and customer service. Our product program consists of among others:

Hollow Metal Frames
- Face and fully welded door and window frames. From standard frames to complex customized frame configurations. If you can design it, we can build it
- Lead lined door and window frames
- Knock down frames for welding and drywall applications
- Pocket frames

Hollow Metal Doors
- Polystyrene core construction
- Steel stiffened doors
- Lead lined doors
- Temperature rise doors
- Dutch doors

Openings Solutions

Classified to FEMA P-361 (2015) and certified to ICC 500 (2014)

Labeling and fire rating under the procedures from Underwriters Laboratory (UL). Rocky Mountain Metals, Inc. is authorized to label three-sided frames and doors for up to three hours and sidelights and windows for up to 90 minutes.

All our products qualify for full LEED Credits for recycled content MR.4.1 and 4.2, as they contain more than 25% recycled material as per the LEED Definitions (100% of Post Consumer and 50% of Pre Consumer Recycled Content).

We are a member of the **National Association of Architectural Metal Manufacturers (NAAMM) and Hollow Metal Manufacturers Association (HMMA). Our products are manufactured in accordance with the applicable HMMA Standards** such as HMMA 802-07 "Manufacturing of Hollow Metal Doors and Frames" and HMMA 841 -07 "Tolerances and Clearances for Commercial Hollow Metal Doors and Frames". Consequently, as per these standards, we meet and or exceed the applicable ANSI/SDI criteria.

We have an experienced management team in place with solid Hollow Metal background, as well as, experience from top level positions in the Door and Hardware Industry in the US and internationally.

Please take the time to review the information in this brochure to get a better understanding of our products and services we can provide. I hope that you will find this helpful enough to give us a chance to show what we can do for you in the areas of Standard and Custom Hollow Metal .

Sincerely yours,

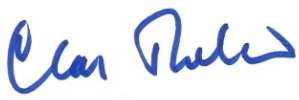

Clas Thelin
President
cthelin@rockymountainmetals.com

Rocky Mountain Metals, Inc. is the proud supplier of hollow metal doors, frames and/or windows for these projects

Educational Facilities - Suitable solutions for any level

Over the years we have supplied doors and frames to educational facilities all over the country. From small basic school facilities to state of the art universities and colleges. Our product program is constantly under development to cater to the ever changing life safety needs in this area. Additionally, our products are frequently used where complex and highly customized hollow metal solutions are chosen.

Greenway High School	Phoenix, AZ
Thunderbird High School	Phoenix, AZ
Tramonto Ridgeline Academy	Phoenix, AZ
Western School of Science and Technology	Phoenix, AZ
Mammoth Middle School	Mammoth Lakes, CA
San Diego State University	San Diego, CA
Cherry Creek Middle School #11	Aurora, CO
Dakota Ridge State University	Littleton, CO
American Academy	Parker, CO
Dodge City High School USD 443	Dodge City, KS
Sunnyside Elementary School	Dodge City, KS
Unified School District #443 Soule Elementary	Dodge City, KS
Lincoln Elementary School	Hoisington, KS
Andre Agassi College Prep Academy	Las Vegas, NV
Clifford J. Lawrence Jr. High	Las Vegas, NV
Hollingsworth Elementary School	Las Vegas, NV
Linda Rankin Givens Elementary School	Las Vegas, NV
Palo Verde High School	Las Vegas, NV
Petersen Elementary School	Las Vegas, NV
Rancho High School	Las Vegas, NV
UNLV Campus	Las Vegas, NV
Rio Grande High School	Albuquerque, NM
University of New Mexico Farris Engineering	Albuquerque, NM
Fort Wingate Elementary School	Fort Wingate, NM
New Mexico State University Grants	Grants, NM
Hobbs Schools	Hobbs, NM
Santa Fe Indian School	Santa Fe, NM
West Las Vegas Middle School	Las Vegas, NM
Woodard Schools **(FEMA)**	Woodard, OK

More Educational listings are on the next page!

New Mexico State University Grants
Grants, New Mexico

Petersen Elementary School
Las Vegas, NV

Rocky Mountain Metals, Inc. is the proud supplier of hollow metal doors, frames and/or windows for these projects

Educational Facilities - Suitable solutions for any level

Over the years we have supplied doors and frames to educational facilities all over the country. From small basic school facilities to state of the art universities and colleges. Our product program is constantly under development to cater to the ever changing life safety needs in this area. Additionally, our products are frequently used where complex and highly customized hollow metal solutions are chosen.

University of Rhode Island-College of Pharmacy	Kingston, RI
Adrian Independent School District	Adrian, TX
Canyon Independent School District **(FEMA)**	Amarillo, TX
River Road Independent School District	Amarillo, TX
Antonian College Preparatory High School	Castle Hills, TX
JFK Elementary School	Corpus Christi, TX
Lubbock Cooper Independent School District	Cedar Park, TX
George W. Truett Elementary School	Dallas, TX
Decatur Elementary School	Decatur, TX
Dimmitt High School & Middle School	Dimmitt, TX
Everman Joe C Bean High School	Everman, TX
TCU Annie Richardson Bass Building	Fort Worth, TX
Frenship New Elementary School	Wolfforth, TX
Sam Houston Elementary School	La Feria, TX
Georgetown High School	Georgetown, TX
Texas Tech University—Architectural Bldg.	Lubbock, TX
Texas Tech University Horn Hall	Lubbock, TX
Texas Tech University Sports Performance Center	Lubbock, TX
Alice Ponder Elementary School	Mansfield, TX
Brooks Wester Middle School	Mansfield, TX
Glenn Harmon Elementary School	Mansfield, TX
J L Boren Elementary School	Mansfield, TX
Rogene Worley Middle School	Mansfield, TX
Barbara Fasken Elementary School	Midland, TX
Bynum Schools	Midland, TX
Southwest Elementary School	Midland, TX
Austin Elementary	San Angelo, TX
Judith A. Resnik Elementary School	San Antonio, TX
Taylor Independent School District	Taylor, TX
Boulter Middle School	Tyler, TX
Southwest Legacy High School	Von Ormy, TX
North Elementary School	White Settlement, TX

Texas Christian University—Annie Richardson Bass Building—Fort Worth, TX

Texas Tech University Sports Performance Center Lubbock, TX

Rocky Mountain Metals, Inc. is the proud supplier of hollow metal doors, frames and/or windows for these projects

Medical Care Facilities - From clinics to full size hospitals

The width of our products as well as our capability to supply anything from a simple door opening to custom hollow metal configurations of almost any size and complexity has made us a favored choice when it comes to medical care facilities. We can competitively supply products and solutions on all different levels, from a small clinic to full scale hospitals like the VA Hospital in Denver and Walter Reed Army Medical Center. This has gained us substantial expertise in the special products and needs in this area.

Mayo Clinic	Scottsdale, AZ
Banner Estrella Medical Center	Phoenix, AZ
Clovis Community Medical Center	Clovis, CA
Veterans Affairs Hospital	Aurora, CO
D.I. Medical and Research Center	Denver, CO
Mercy Medical Life Safety	Denver, CO
Poudre Valley Hospital	Denver, CO
Greely Hospital	Greely, CO
Sterling Medical Center	Sterling, CO
St. Catherine Cancer Center	Garden City, KS

Georgetown Behavioral Health Institute Georgetown, TX

Walter Reed Medical Center Bethesda, MD

Annapolis Health Clinic	Annapolis, MD
Walter Reed Army Medical Center	Bethesda, MD
Walter Reed Behavioral Health Learning Center	Bethesda, MD
Henderson Hospital	Henderson, NV
Mountain View Hospital	Las Vegas, NV
Mountain View Regional Medical	Las Vegas, NV
Sunrise Hospital	Las Vegas, NV
UMC Trauma Center	Las Vegas, NV
Behavioral Health Clinic	Fort Brigg, NC
Eufaula Indian Health **(FEMA)**	Eufaula, OK
Comanche County Memorial Hospital	Lawton, OK
Conners State Allied Health & Nursing Facility	Muskogee, OK
Texas Rehabilitation Hospital	Arlington, TX
Wolflin Medical Center	Amarillo, TX
Matagonda Hospital	Bay City, TX
Harmony Science Center	Cedar Park, TX
Presbyterian Hospital	Denton, TX
Forest Park Medical Center	Fort Worth, TX
Mesa Springs Hospital	Fort Worth, TX
Sundance Psychiatric Hospital	Garland, TX
Georgetown Behavioral Health Institute	Georgetown, TX
Greystar Texas Medical Center	Laredo, TX
Community Health Center	Lubbock, TX
J Cleo Wellness Center	Ozona, TX
CWC Health Science	Riverton, WY

Rocky Mountain Metals, Inc. is the proud supplier of hollow metal doors, frames and/or windows for these projects

Municipal, Military and Governmental Facilities - Security and Safety

In today's society security and safety are top priorities for most municipal, military and governmental facilities. We are proud of the confidence that our customers put on us and our ability to provide this for different openings and other hollow metal solutions. With a strong base in the Colorado, Texas and Nevada areas we have also been trusted to provide supply our products to other areas.

Fort Mcclellan Army National Training Center **(FEMA)**	Anniston, AL
Davis-Monthan AFB-Aerospace Maintenance & Regeneration Group	Davis-Monthan AFB, AZ
F-35 Squadron Ops	Luke AFB, AZ
4th ID CAB Consolidated Battalion HQ	Fort Carson, CO
Chemical Science Building	Tinker AFB, OK
Company Operations Facility	Fort Carson, CO
Division Headquarters	Fort Carson, CO
Mountain View Ops	Buckley AFB, Aurora, CO
Visiting Officers Quarters	Peterson AFB, CO
German Air Facility	Holloman AFB, NM
Taos County Administration and Detention	Taos, NM
Cold Creek Prison	Indian Springs, NV
Clark County Detention Center	Las Vegas, NV
Federal Justice Tower	Las Vegas, NV
Juvenile Treatment Facility	Las Vegas, NV
Las Vegas Metropolitan Police Department	Las Vegas, NV
Las Vegas Metropolitan Police Department – Fingerprint Bureau	Las Vegas, NV
Regional Justice Center	Las Vegas, NV
Visiting Officers Quarters	Nellis AFB, NV
Lovelock Prison	Lovelock, NV
McKinley County Justice Complex	Gallup, NM
National Security and Science Building	Los Alamos, NM
Visiting Officers Quarters	Altus AFB, OK
Sheppard Air Force Base	Norman, OK
USPS Distribution Center	Portland, OR
Abilene Zoo	Abilene, TX
Visiting Officers Quarters	Dyess AFB, TX
DFW Airport Terminal E	Dallas Ft. Worth, TX
West Memorial Place	Houston, TX
Midland Municipal Courts	Midland, TX
Bexar Metro 911 Call Center **(FEMA)**	San Antonio, TX
MCESD #8 Fire Station **(FEMA)**	Spring, TX
P-251 Training Facility & Hangar Naval Air Station	Whidbey Island, WA
Army Aviation	Warren AFB, Wyoming

Clark County Detention Center
Las Vegas, NV

Federal Justice Tower
Las Vegas, NV

Rocky Mountain Metals, Inc. is the proud supplier of hollow metal doors, frames and/or windows for these projects

Corporate, Retail and Commercial Buildings - Image and cost efficiency

When it comes to corporate, retail and commercial buildings the top priorities are most often image and cost efficiency. You want to be able communicate strength and success but at the same keep things under pretty tight cost control. We have been trusted to support in these efforts by a number of very successful companies.

Intel Headquarters – Water Plant	Albuquerque, NM
Rush Truck Center	Commerce, CO
Village at the Peaks	Longmont, CO
ABC Studios	New York, NY
Ocean Spray III	Henderson, NV
Bonnie Lane Senior Housing	Las Vegas, NV
Hilton Executive Offices	Las Vegas, NV
Switch Super NAP 8 Data Center	Las Vegas, NV
Veer Towers at City Center	Las Vegas, NV
Mesa Microlab	Albuquerque, NM
Weapons Integration Facility	Los Alamos, NM
National Cowboy Hall of Fame	Oklahoma City, OK
Harley Davidson	Dallas, TX
KPMG Plaza at Hall Arts	Dallas, TX
Chase Building	Farmers Branch, TX
Alcon Labs	Fort Worth, TX
Facebook Data Center **(FEMA)**	Fort Worth, TX
Pier One Headquarters	Fort Worth, TX
Merrick Pet Foods	Hereford, TX
Energy Plaza	Houston, TX
West Memorial Place	Houston, TX
Cabela's	Lubbock, TX
XTO Energy Office	Midland, TX
Helmerich & Payne Facility Expansion	Odessa, TX

Switch SuperNAP 8
Las Vegas, NV

West Memorial Place
Houston, TX

Rocky Mountain Metals, Inc. is the proud supplier of hollow metal doors, frames and/or windows for these projects

Hotels - Hospitality and comfort coupled with safety and security

With Nevada and Texas as a base, we are a trusted supplier to the hospitality industry. We have a proven track record to be able to support our customers need to provide a high level of comfort but at the same time not compromise the safety and security for their guests. Our products show up in a number of very prestigious facilities and also in more cost conscious environments.

Hyatt	Sedona, AZ
Ritz Carlton	San Francisco, CA
Adam's Mark Hotel	Denver, CO
Vail Marriott	Vail, CO
The Miami Beach EDITION Hotel	Miami, FL
Embassy Suites	Las Vegas, NV
Hampton Inn	Las Vegas, NV
Howard Hughes Parkway	Las Vegas, NV
Mirage Hotel Theater Center	Las Vegas, NV
Polo Twin Towers	Las Vegas, NV
Hilton Garden Inn	Oklahoma City, OK
Winstar Hotel and Casino	Thackerville, OK
Marriott North	Austin, TX
Marriott South	Austin, TX
Marriott	Ft. Worth, TX
Hilton Garden Inn	Lubbock, TX
Marriott	Plano, TX
Townplace Suites	Vernal, UT

The Miami Beach EDITION Hotel
Miami, FL

Hyatt
Sedona, AZ

Ritz Carlton
San Francisco, CA

Marriott
Vail, Colorado

Rocky Mountain Metals, Inc. is the proud supplier of hollow metal doors, frames and/or windows for these projects

Libraries - Serenity and design

We are proud of the trust we have been shown and the opportunity we have been given to be part of the more prestigious libraries in the country. These are buildings where design and the feel of serenity are top priorities and it is certainly prestigious for a hollow metal company like Rocky Mountain Metals to support this.

JFK Library	Boston, MA
Lied Library	Las Vegas, NV
TCU Mary Couts Burnett Library	Fort Worth, TX

JFK Library
Boston, MA

Casinos - Money, money, money…

Our base in Las Vegas has provided us with ample opportunities to supply products to some of the most prestigious casinos in the world. Our products have proven to provide the right level of security and aesthetics to cater to this demanding market.

Caesar's Palace
Las Vegas, NV

Bally's Casino	Las Vegas, NV
Boardwalk Casino	Las Vegas, NV
Caesar's Palace	Las Vegas, NV
MGM Grand – Theatre	Las Vegas, NV
The Orleans Hotel and Casino	Las Vegas, NV
Stratosphere	Las Vegas, NV
Sunrise Casino	Las Vegas, NV
Treasure Island Casino	Las Vegas, NV
Winstar Hotel and Casino	Thackerville, OK

The Orleans Hotel and Casino
Las Vegas, NV

Hollow Metal Doors

A full line of Hollow Metal Doors

- 1100 Doors with Polystyrene Core
- 1200 Steel Stiffened Doors
- 1300 Temperature Rise Doors
- 1400 Doors for Tornado Solutions
- 1500 Lead lined Doors
- 1600 Dutch Doors

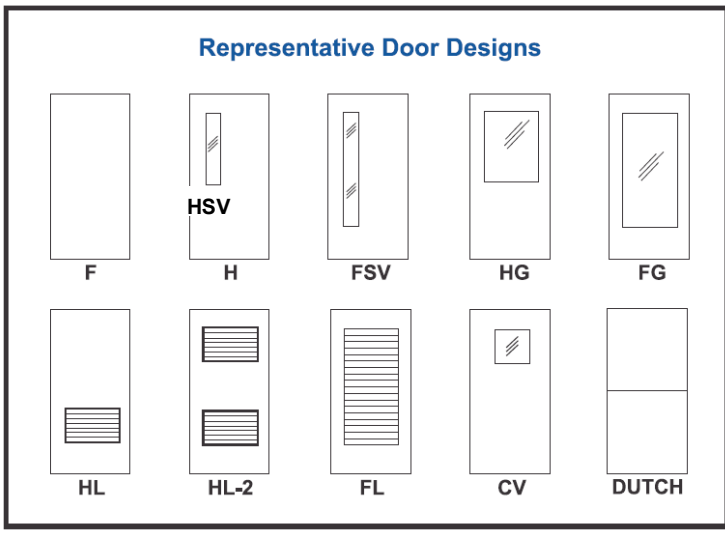

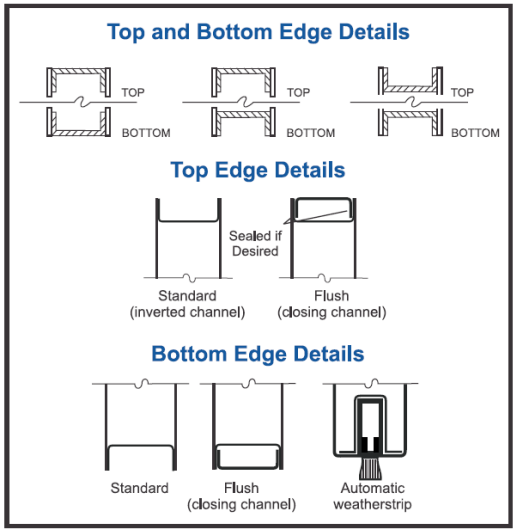

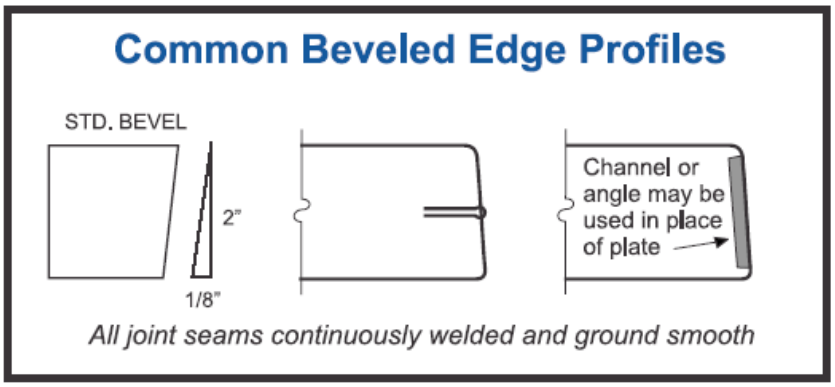

Manufacturing Tolerances

Manufacturing tolerances shall be maintained within the following limits for Doors

Width +/- 1/32 in. (.08mm)
Height +/- 3/64 in. (1.2mm)
Thickness +/- 1/16 in. (1.6mm)
Hardware cutout dimensions/Template dimensions +0.015”, -0”
Hardware location +/- 1/32 in. (.08mm)

Door Details - Typical Hardware Preparations

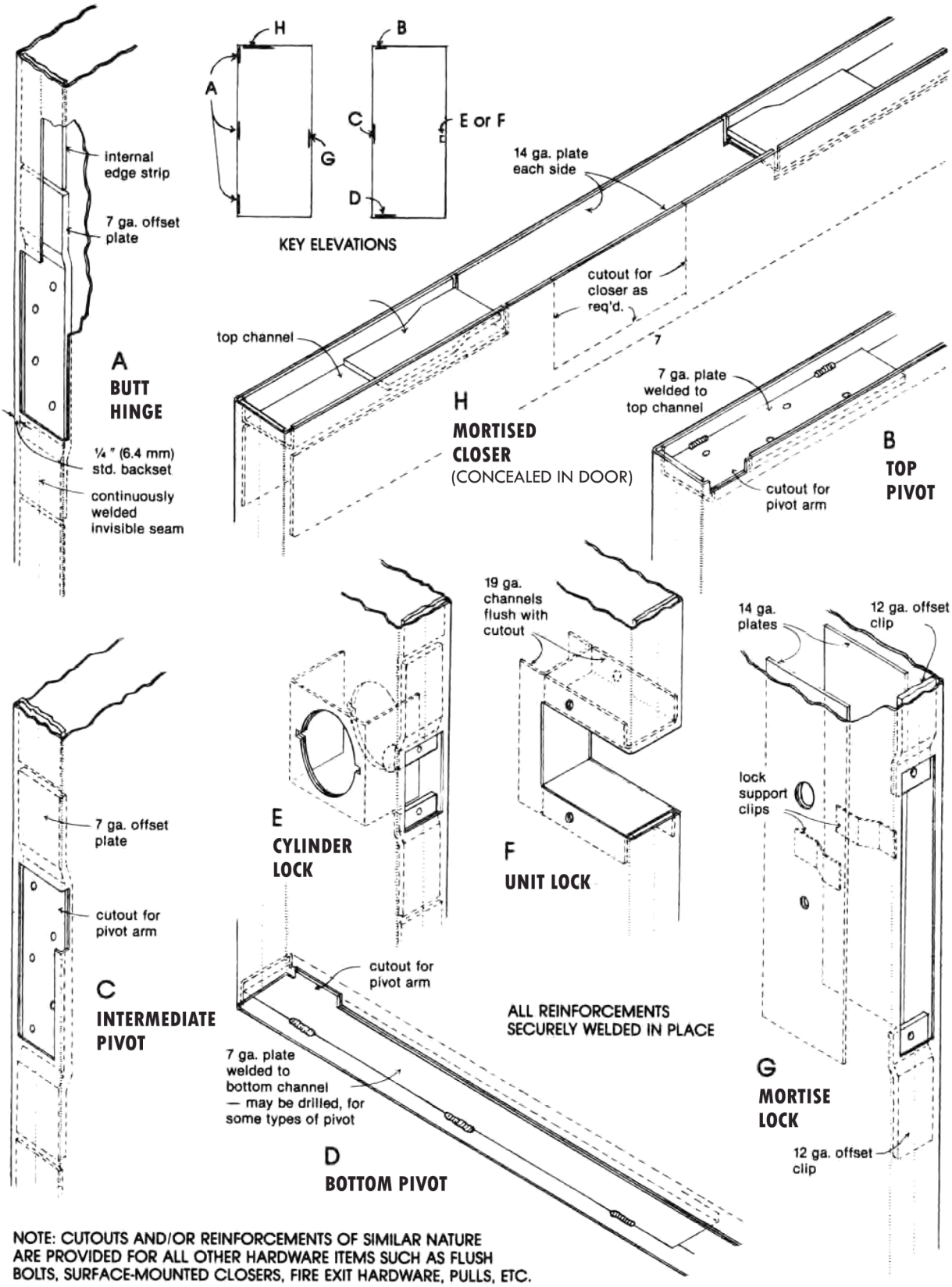

NOTE: CUTOUTS AND/OR REINFORCEMENTS OF SIMILAR NATURE ARE PROVIDED FOR ALL OTHER HARDWARE ITEMS SUCH AS FLUSH BOLTS, SURFACE-MOUNTED CLOSERS, FIRE EXIT HARDWARE, PULLS, ETC.

1100 Hollow Metal Door with Polystyrene Core/Fire Rated

Face Material	Galvannealed A40 or A60 ASTM-A-653
Face thickness	12, 14, 16 and 18 Ga.
Construction	Rigid polystyrene core bonded to both face sheets
Door thickness	1 3/4" Standard
Hardware Locations	Any specified locations
Reinforcements	7 Ga. 1 1/4" x 10" joggled hinge reinforcement, drilled and tapped 12 Ga. mortise hardware tabs, drilled and tapped 14 Ga. surface hardware and trim reinforcement
Edge reinforcement	Both edges reinforced with 16 Ga. full length channels spot welded to the face sheets
Vertical edges	Fully welded with no visible seam (for doors up to 4' wide and 8' height
Glazing/ Louvers	Glazing stops to be set for 1/4" glass (3/8" space) unless otherwise requested. Note: Glass should be cut 1/4" less than door cut out. Exposed glass opening is 1 5/16" less than cutout dimensions. Louver size is actual size of door cutout
Handing	Doors are handed
Appearance	Faces and edges free of defects, warp and buckle
Finish	Thoroughly cleaned and coated with a rust inhibiting primer meeting requirements as per ANSI/SDI A250.10
Fire Rated	3 ft. wide, 7ft. High doors can be manufactured fire rated up to 3 hours. Hardware can be mortise or cylindrical locks. Mortise or rim type fire exit hardware. Surface mounted vertical rod type fire exit hardware.

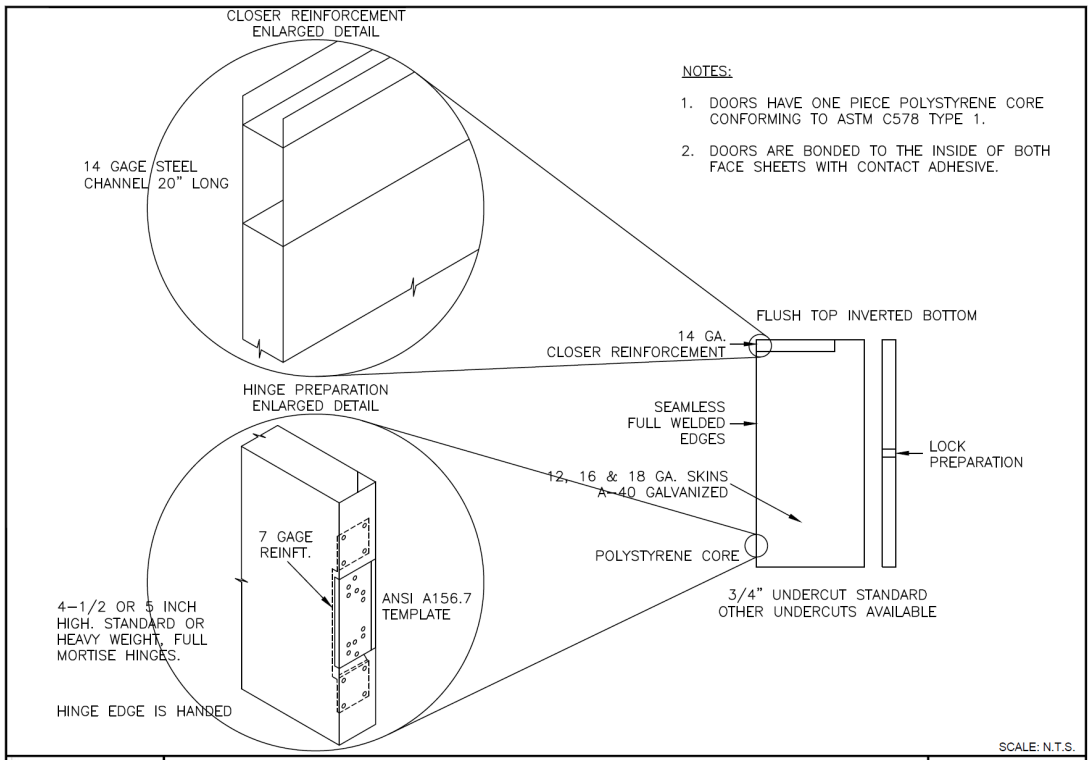

1200 Steel Stiffened Door / 1500 Lead Lined Door

Face Material	Galvannealed A40 or A60 ASTM-A-653
Face thickness	12, 14, 16 and 18 Ga.
Lead Lining	Center door lead lining (optional)
Construction	Hollow metal with vertical steel stiffeners (ribs). Space between ribs Insulated with glass wool insulation
Door thickness	1 3/4" Standard
Hardware Locations	Any specified location
Reinforcements	7 Ga. 1 1/4" x 10" joggled hinge reinforcement, drilled and tapped 12 Ga. mortise hardware tabs, drilled and tapped 14 Ga. surface hardware and trim reinforcement
Edge reinforcement	Vertical and horizontal edges reinforced with 16 Ga. (min) full length channels spot welded to the face sheets
Vertical edges	Fully welded with no visible seam (for doors up to 10' height and 4' width)
Glazing/ Louvers	Glazing stops to be set for 1/4" glass (3/8" space) unless other wise requested. Note: Glass should be cut 1/4" less than door cut out. Exposed glass opening is 1 5/16" less than cutout dimensions. Louver size is actual size of door cutout
Handing	Doors are handed
Appearance	Faces and edges free of defects, warp and buckle
Finish	Thoroughly cleaned and coated with a rust inhibiting primer meeting requirements as per ANSI/SDI A250.10
Options	UL Labeling requirements as specified

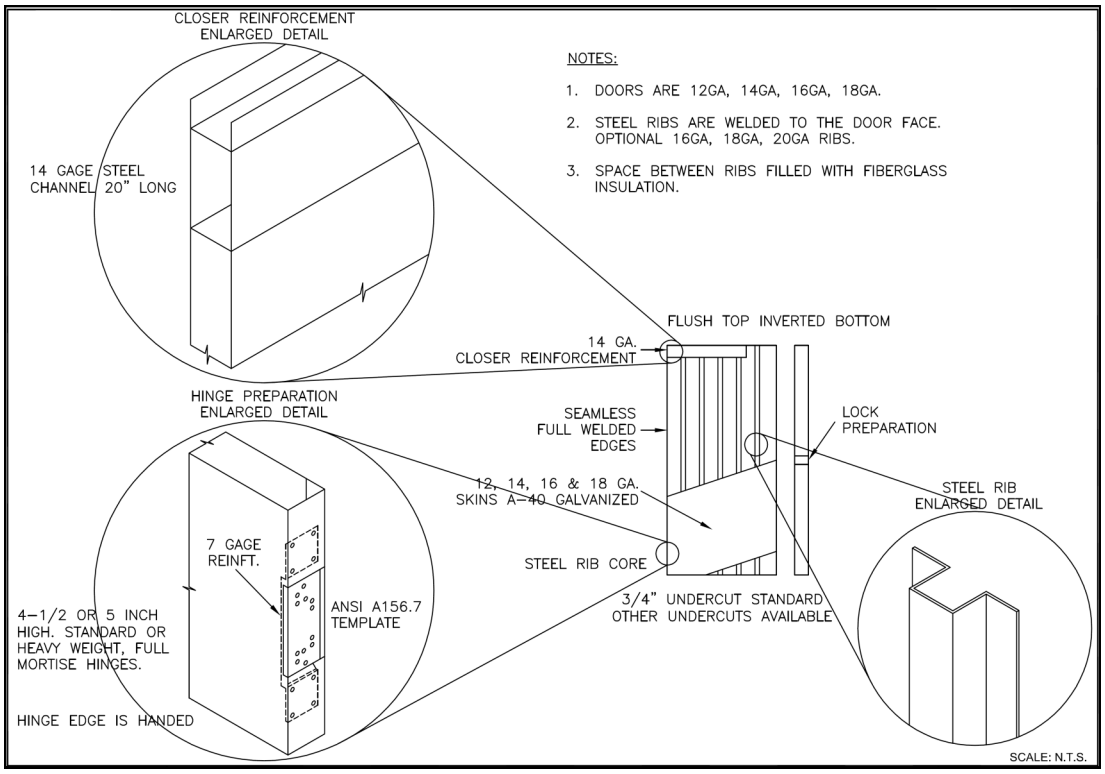

1300 Temperature Rise Door

Face Material	Galvannealed A40 or A60 ASTM-A-653
Face thickness	12, 14, 16 and 18 Ga.
Construction	Rigid mineral board core bonded to both face sheets
Door thickness	1 3/4" Standard
Hardware Location	Any specified locations
Reinforcements	7 Ga. 1 1/4" x 10" joggled hinge reinforcement, drilled and tapped 12 Ga. mortise hardware tabs, drilled and tapped 14 Ga. surface hardware and trim reinforcement
Edge reinforcement	Vertical and horizontal edges reinforced with 16 Ga. full length channels spot welded to the face sheets
Vertical edges	Fully welded with no visible seam (for doors up to 10' height and 4' width)
Glazing	Glazing stops to be set for 1/4" glass (3/8" space) unless other wise requested. Note: Glass should be cut 1/4" less than door cut out. Exposed glass opening is 1 5/16" less than cutout dimensions. Glass area up to 100 sq. inches.
Handing	Doors are handed
Appearance	Faces and edges free of defects, warp and buckle
Finish	Thoroughly cleaned and coated with a rust inhibiting primer meeting requirements as per ANSI/SDI A250.10
Temperature	60-180 min. Labels available for 450 degree and 250 degree temp.
Options	UL Labeling requirements as specified

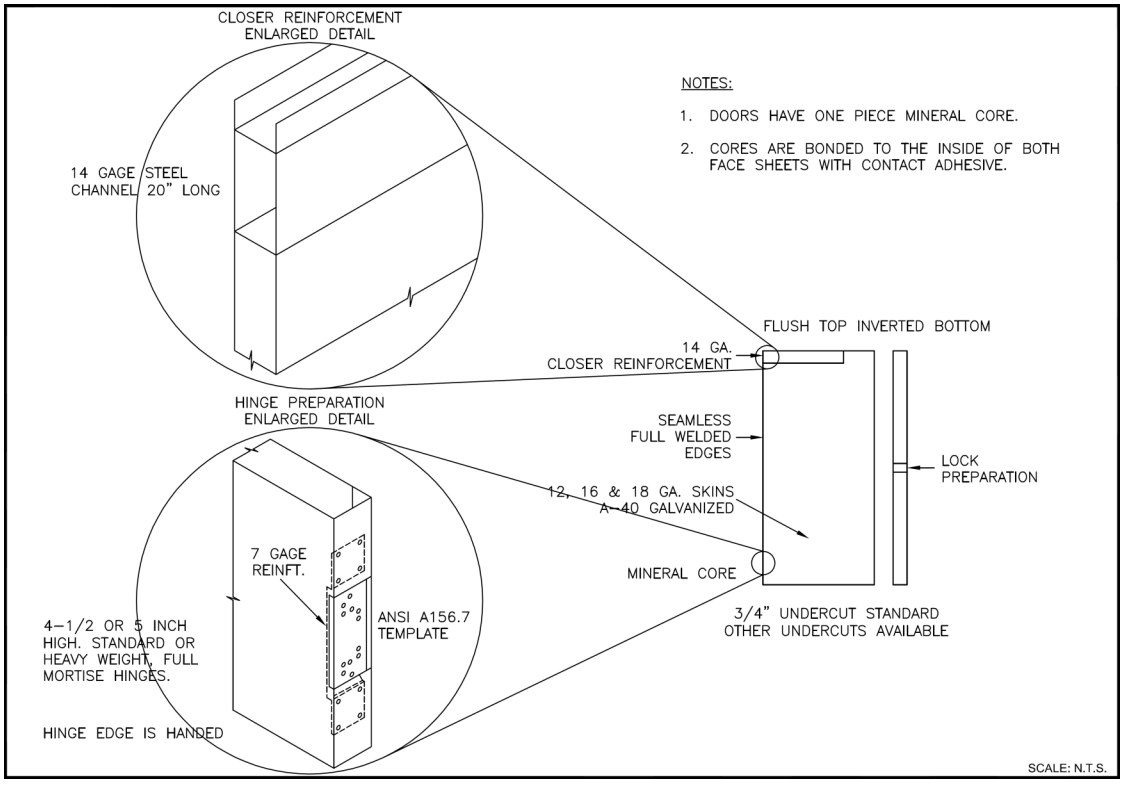

1600 Dutch Doors

Face Material	Galvannealed A40 or A60 ASTM-A-653
Face thickness	12, 14, 16 and 18 Ga.
Construction	Can be manufactured as a Polystyrene Core (1100 door) or Steel Stiffened Door (1200 door)
Door thickness	1 3/4" Standard
Hardware Locations	Any specified locations
Reinforcements	7 Ga. 1 1/4" x 10" joggled hinge reinforcement, drilled and tapped 12 Ga. mortise hardware tabs, drilled and tapped 14 Ga. surface hardware and trim reinforcement
Edge reinforcement	Both edges reinforced with 16 Ga. full length channels spot welded to the face sheets
Vertical edges	Fully welded with no visible seam (for doors up to 4' wide and 8' high)
Glazing/ Louvers	Glazing stops to be set for 1/4" glass (3/8" space) unless other-wise requested. Note: Glass should be cut 1/4" less than door cut out. Exposed glass opening is 1 5/16" less than cutout dimensions. Louver size is actual size of door cutout
Handing	Doors are handed
Appearance	Faces and edges free of defects, warp and buckle
Finish	Thoroughly cleaned and coated with a rust inhibiting primer meeting requirements as per ANSI/SDI A250.10
Options	Shelf available as specified

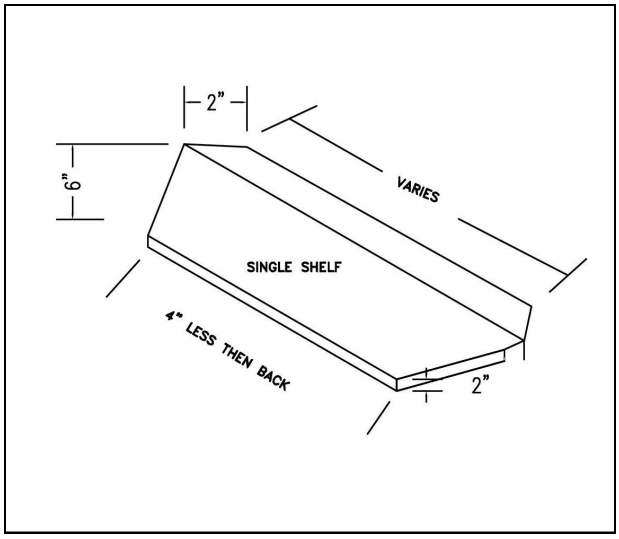

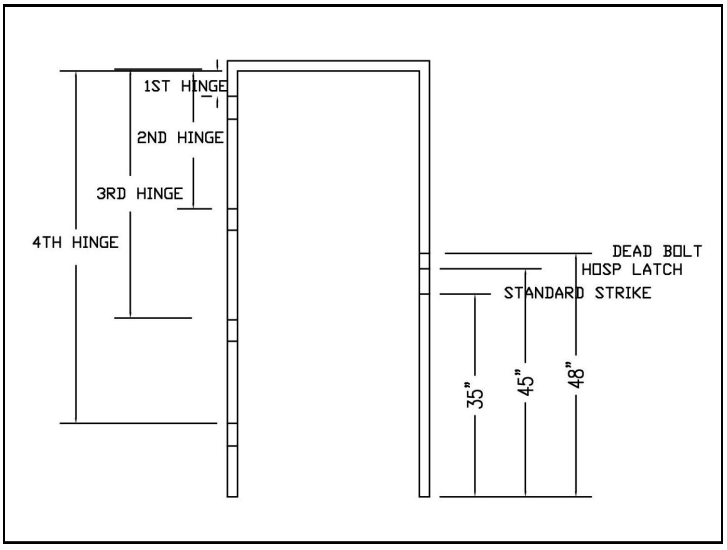

1600 Dutch Doors

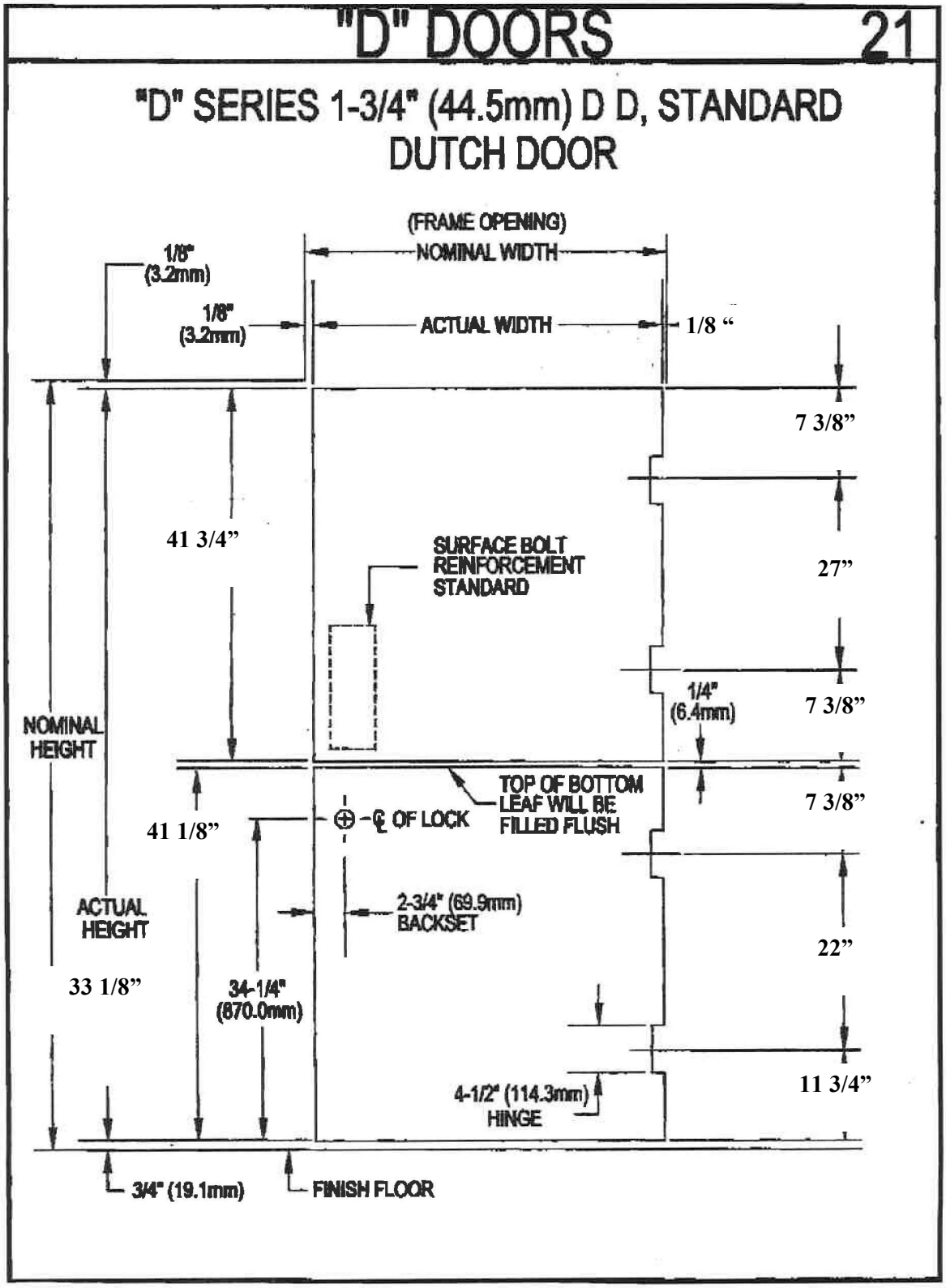

Hollow Metal Frames

A full line of standard and custom frames:

- Standard door frames, fully or face welded, optional with Hospital stops
- Window frames
- Sidelights
- Standard, window and sidelight frames can be supplied lead lined
- Knock down (KD) frames for welding
- Dry wall knock down (KD frames)
- Custom frames
- Pocket Frames
- Double Egress Frames

Manufacturing Tolerances for Frames

Frames for single door or pair of doors:

Width, measured between rabbets at the head; nominal opening width +1/18" – 1/32"

Height (total length of jamb rabbet): nominal opening height +/- 3/64"

Frames overlapping walls to have throat dimension 1/8" greater than dimensioned wall thickness to accommodate irregularities in wall construction.

Standard frame anchors

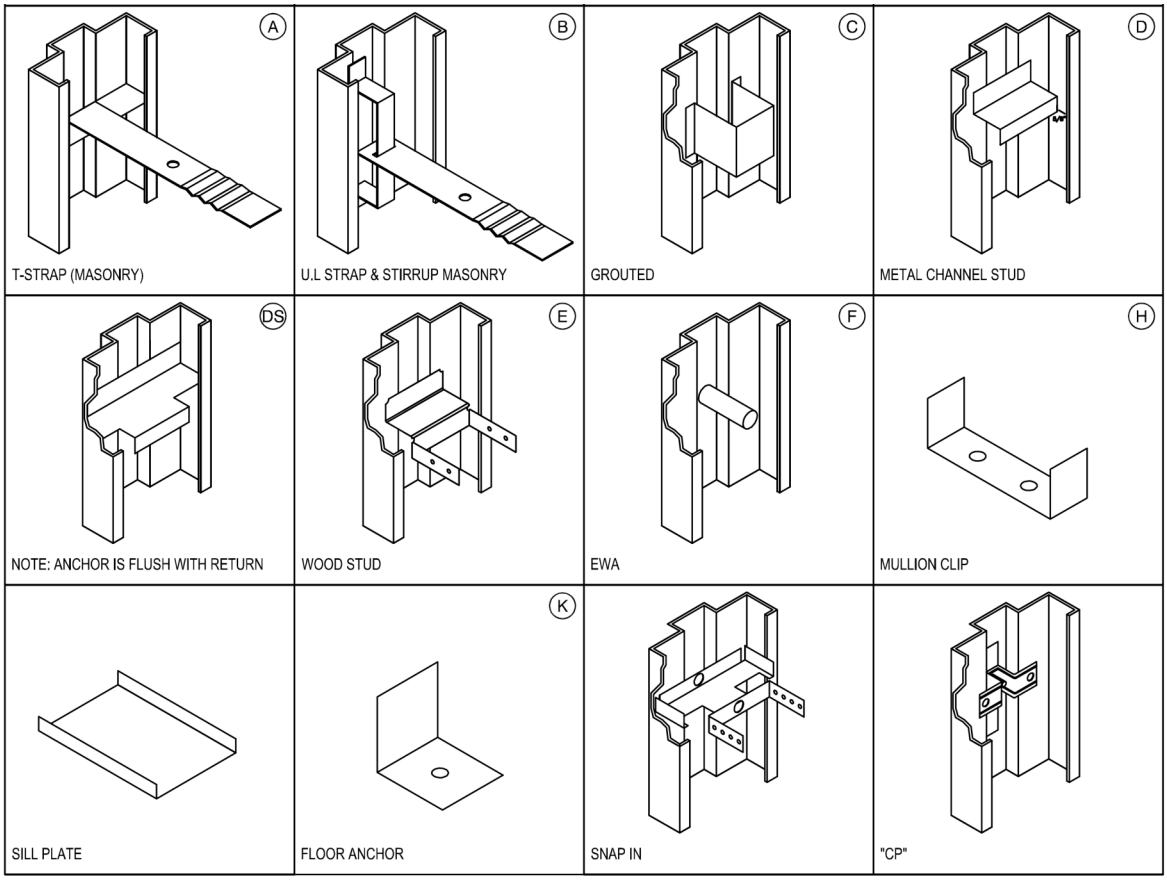

Hollow Metal Frames

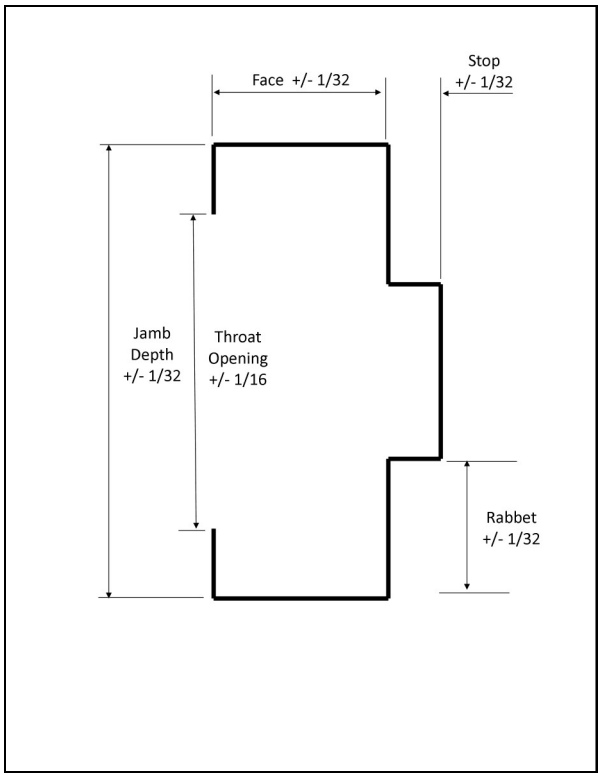

Standard frame sections

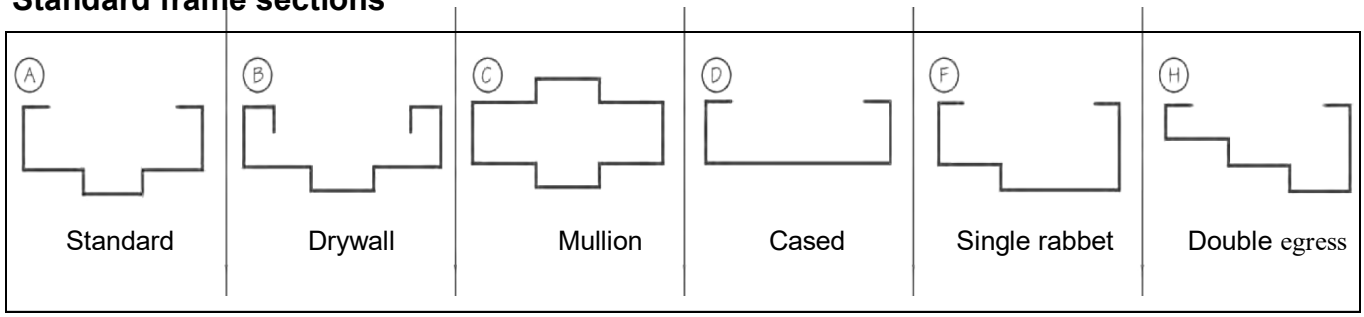

Standard frame elevations

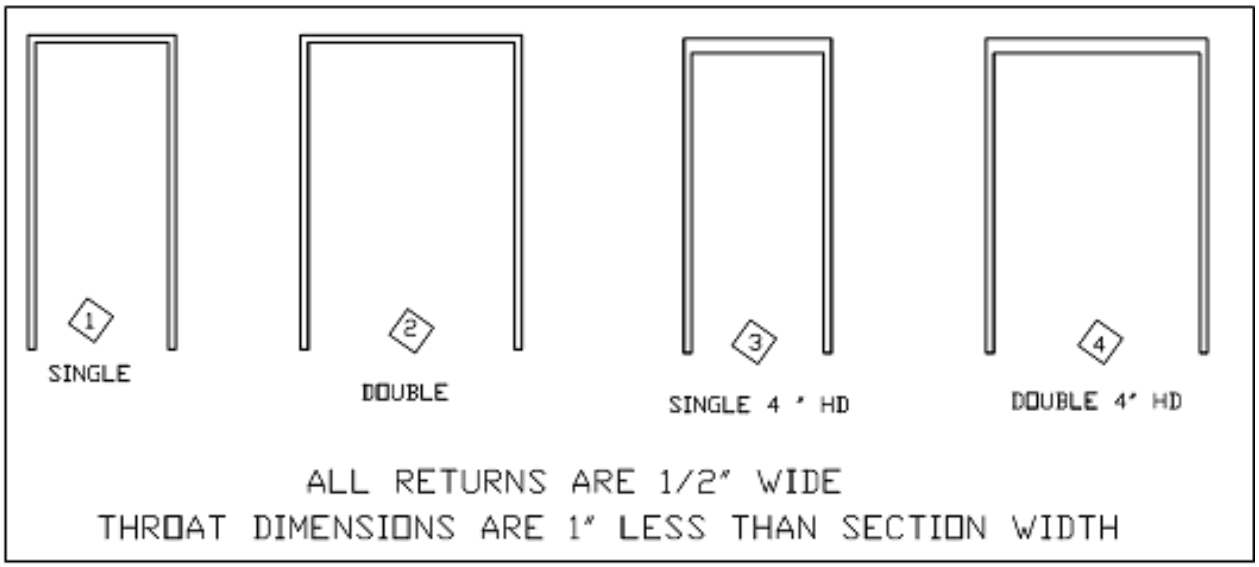

Welded Frames

Material	Galvannealed A40 ASTM-A-653
Thickness	12, 14 and 16 Ga.
Construction	Mitered and welded face and back alternatively welded face only
Appearance	Square, true and free of defects, warp and buckle
Hardware	7 Ga. 1 1/4" x 10" joggled hinge reinforcement, drilled and tapped. 12 Ga hardware reinforcements. Backwelded for additional strength. Also mortised, enforced, drilled and tapped at the factory for hardware in accordance with approved schedule and templates provided by hardware contractor. Strike jambs prepared for three rubber silencers, unless otherwise specified
Anchors	Anchors as specified. For standard frames, four 16 Ga. weld in sill anchors per jamb
Guards	Dust covers on all frames. Mortar guards on frames for masonry walls.
Spreaders	Temporary spreader bars welded to the bottom of all three sided frames. To be removed before installation
Marking	Embossed with opening numbers above the middle hinge. In the jamb for continuous hinge frames
Finish	Thoroughly cleaned and coated with a rust inhibiting primer meeting require ments as per ANSI/SDI A250.10

Typical Hardware Preparations

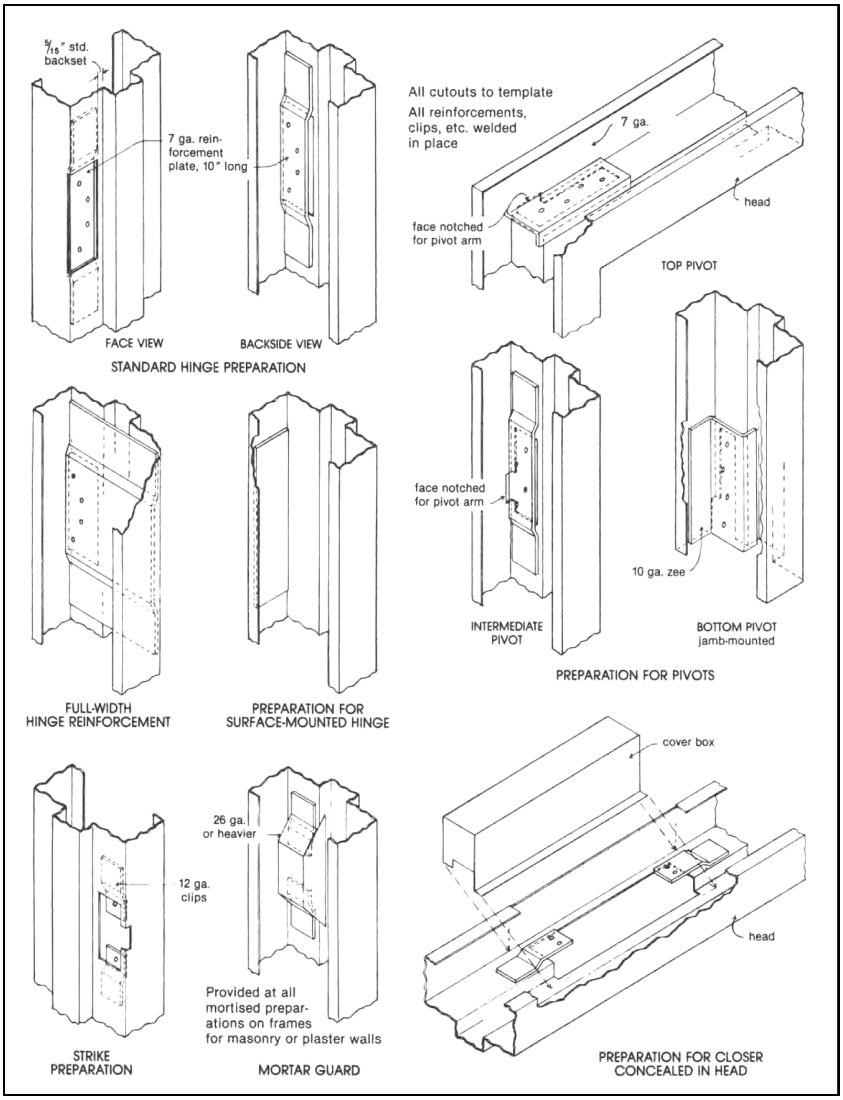

Knockdown (KD) Frames

The frames provided by Rocky Mountain Metals, Inc. are of two types. They are either made to be welded or to be installed in a pre-installed or existing drywall wall.

Material	Galvannealed A40 ASTM-A-653
Thickness	12, 14 and 16 Ga.
Construction	Mitered with self aligning tabs and slots for securely locking the corners
Appearance	Free of defects, warp and buckle
Hardware	7 Ga. 1 1/4" x 10" joggled hinge reinforcement, drilled and tapped. Back welded for additional strength. Also mortised, enforced, drilled and tapped at the factory for hardware in accordance with approved schedule and templates provided by Hardware Contractor. Strike jambs prepared for three rubber silencers, unless otherwise specified
Anchors	Anchors as specified. For standard frames, four 16 Ga. weld in sill anchors per jamb
Guards	Dust covers on all frames. Mortar guards on frames for masonry walls. KD frames for drywall walls supplied with one compression anchor per jamb
Marking	Embossed with opening numbers above the middle hinge. In the head for continuous hinge frames. Temporary marking of heads and jamb to ensure correct pairing
Finish	Thoroughly cleaned and coated with a rust inhibiting primer meeting require ments as per ANSI/SDI A250.10

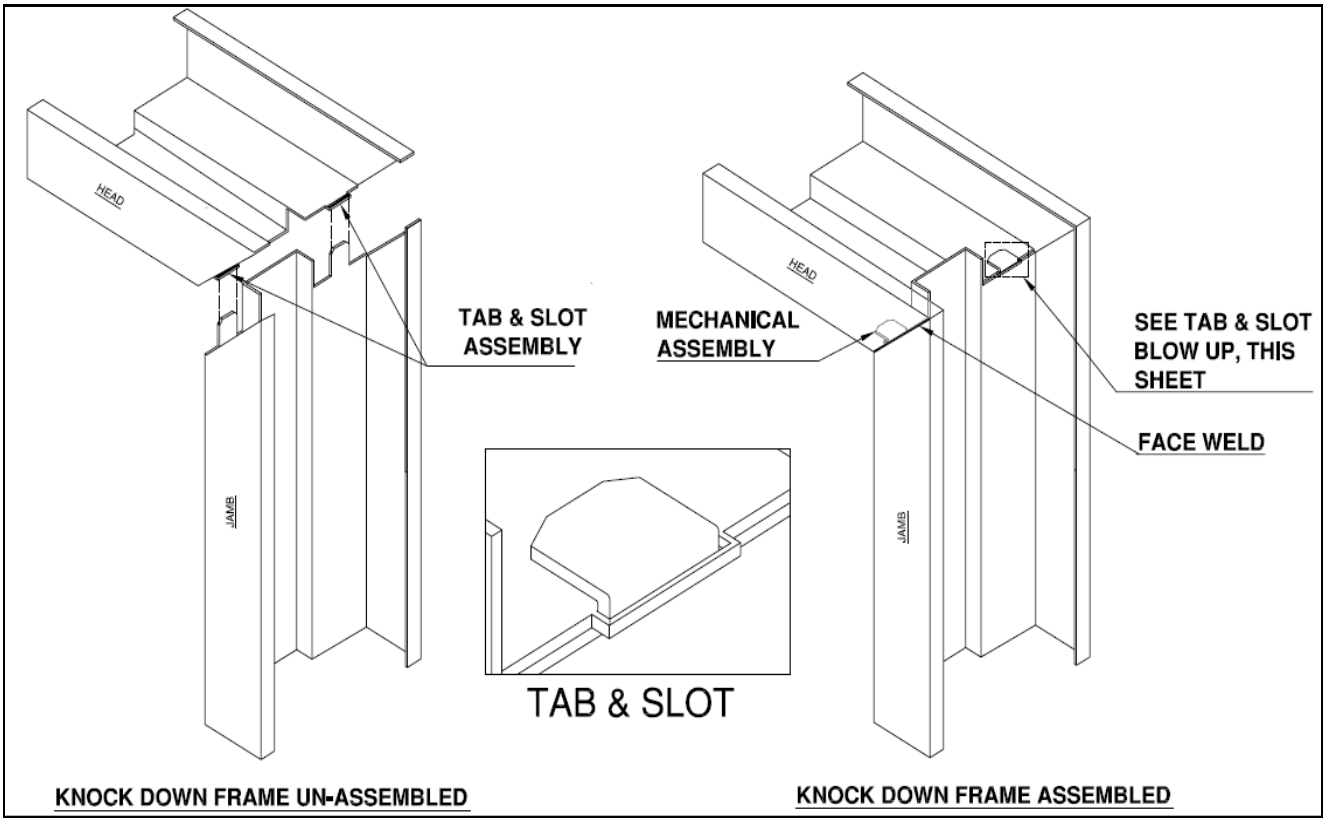

Pocket Frames

Material	Galvannealed A40 ASTM-A-653
Thickness	12, 14 and 16 Ga.
Construction	Mitered and welded face and back alternatively welded face only
Appearance	Square, true and free of defects, warp and buckle
Hardware	Optional prep to accept hardware as specified
Anchors	Anchors to meet any wall construction
Strike	Any specified location
Jamb Width	6” Standard
Guards	Dust covers on all frames. Mortar guards on frames for masonry walls.
Spreaders	Temporary spreader bars welded to the bottom of all three sided frames. To be removed before installation
Marking	Embossed with opening numbers above the middle hinge. In the jamb for continuous hinge frames
Finish	Thoroughly cleaned and coated with a rust inhibiting primer meeting re quirements as per ANSI/SDI A250.10
NOTE	Sliding and tracking not provided

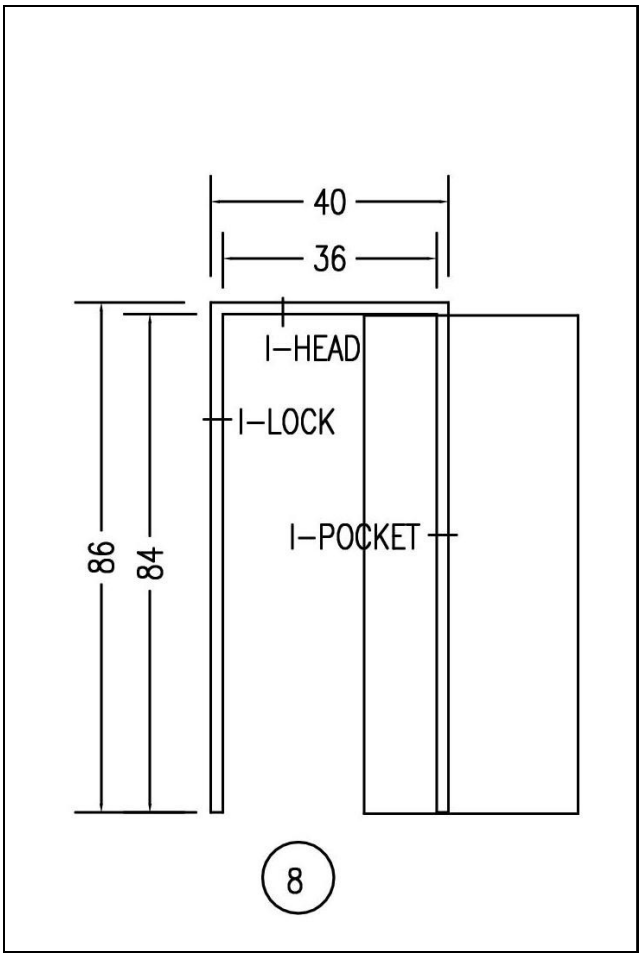

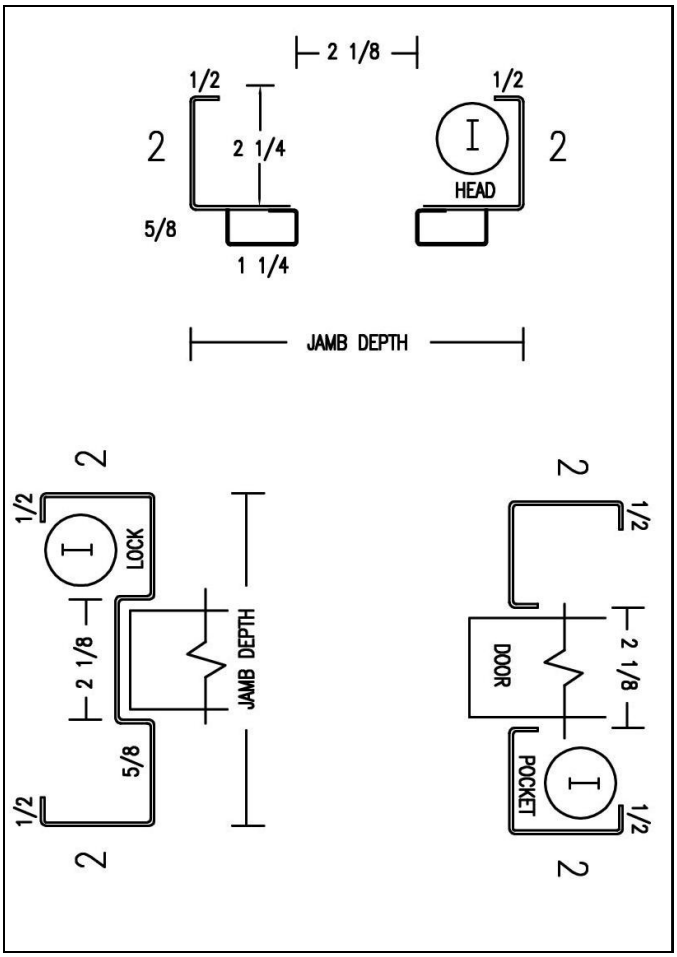

Custom Frames

Rocky Mountain Metals, Inc. has been in business since 1988 and our entire focus is on hollow metal manufacturing. Our plant is fully equipped with modern equipment to cater to your Standard and Custom Hollow Metal needs.

We have the ability to produce complex custom configurations to meet a wide variety of individual needs. Our strong focus is on quick quoting, quality, cost efficiency and quick shipping. In addition to your specific needs and specifications, our products are built by elements according to the NAAMM Standard HMMA 860, 861 and 862. We are a member of NAAMM and we manufacture products in accordance with the Steel Door Institute standards.

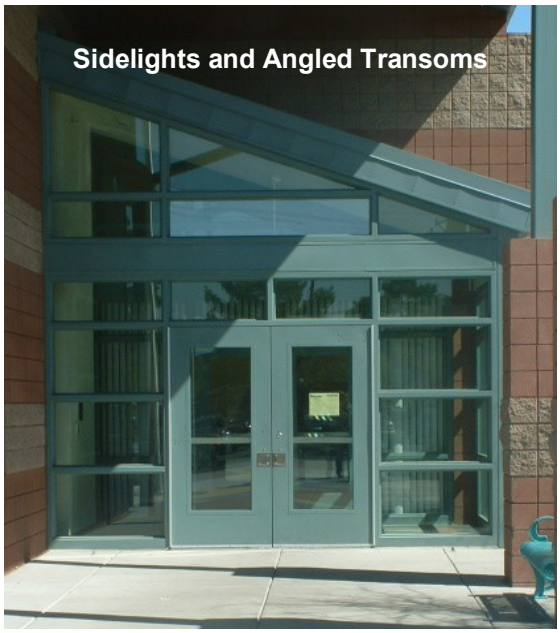

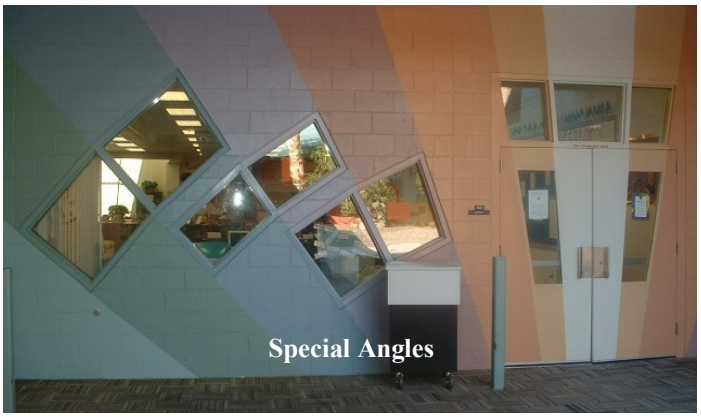

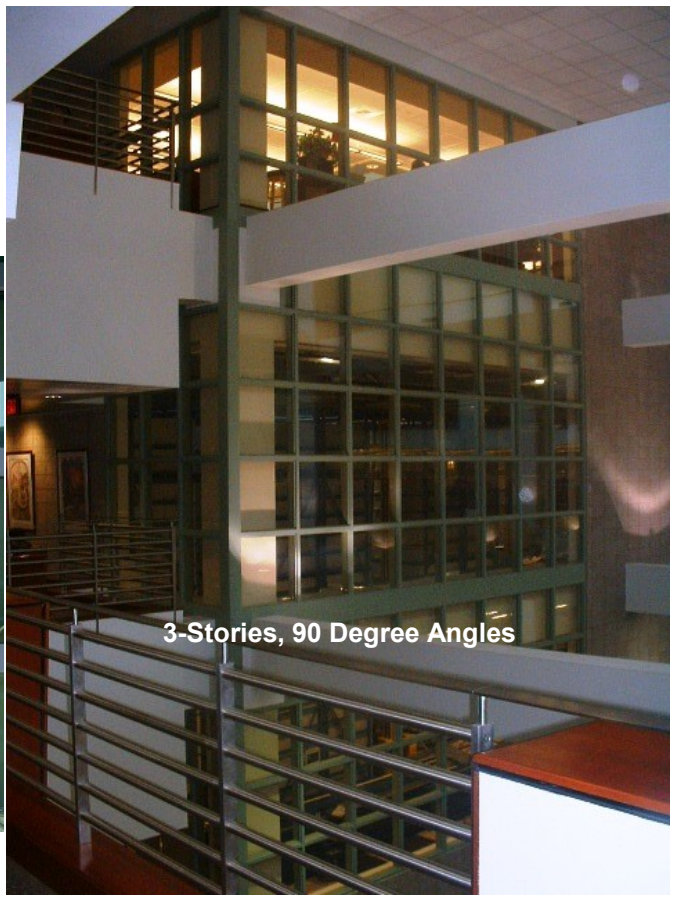

Custom Frames

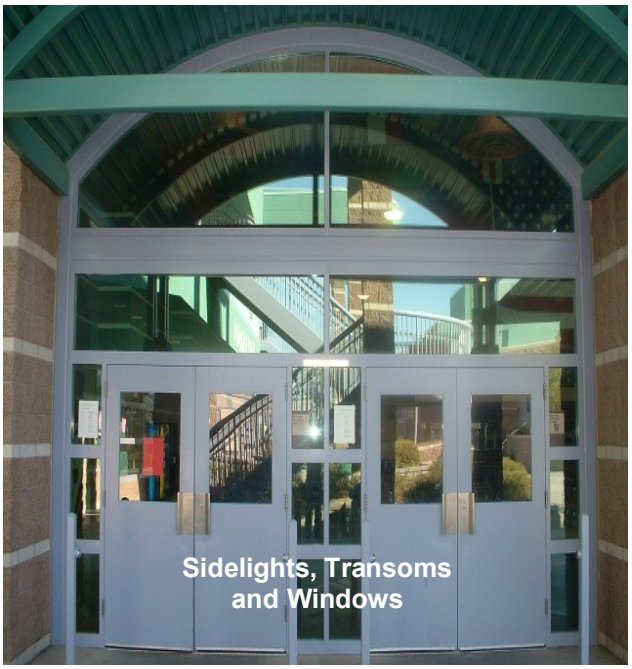

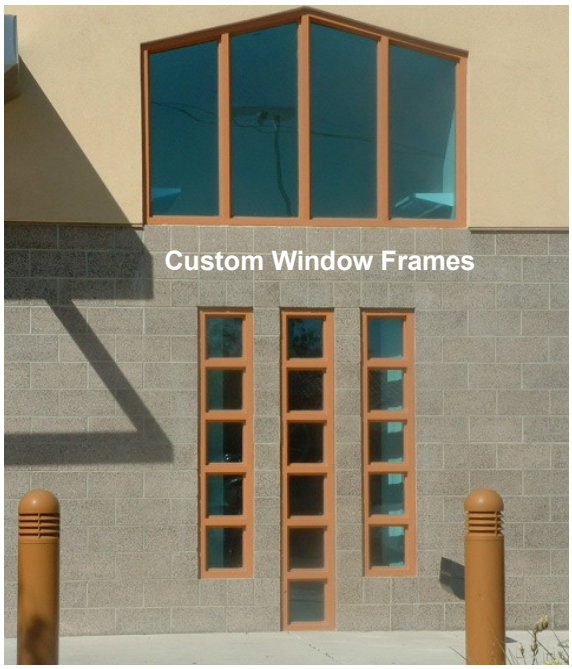

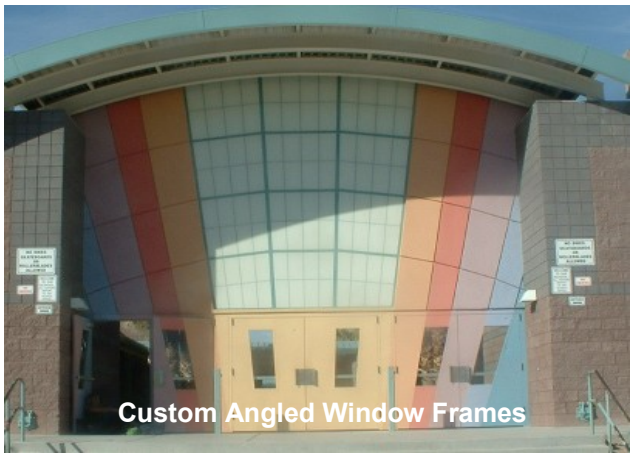

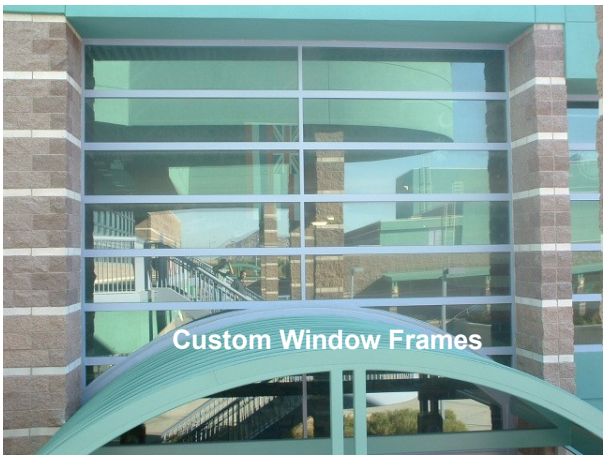

Tornado Resistant Openings

Rocky Mountain Metals, Inc. introduces Openings Solutions classified to FEMA P-361 (2015) and certified to ICC 500 (2014). These openings are tested as complete assemblies including doors, frames and hardware as required by the International Building Code for use in tornado shelters in Group E occupancies. This includes among other applications new construction at K-12 schools and extends to critical emergency operation facilities.

The offerings consists of openings of up to 8 ft. in width and 9 ft. in height for double doors and 4 ft. in width and 9 ft. in height for single doors and is also extended to shutters (openings with four sided frames).

Single Doors and Shutters

Min dimensions	width	2 ft 6 inches
	height	4 ft
Max dimensions	width	4 ft
	height	9 ft
In and out swing		

Double doors

Min dimensions	width	6 ft
	height	6 ft 8 inches
Max dimensions	width	8 ft
	height	9 ft
Out swing only		

1400 FEMA Frame and Shutter Frame Details for Tornado Resistant Openings

Material	Galvannealed A40 ASTM-A-653
Thickness	14 Ga. Galvannealed
Dimensions	2” jambs and 2” or 4” heads as specified
Construction	Mitered and welded face and back
Appearance	Square, true and free of defects, warp and buckle
Reinforcements	4 pcs 7 Ga. 1 1/4” x 10” joggled hinge reinforcement, drilled and tapped. Back welded for additional strength Strike and bolt preps 12 Ga. x 12” long, spot and MIG welded Strike jambs prepared for three rubber silencers, unless Otherwise specified
Hardware Locations	Any specified locations
Guards	Dust covers on all frames. Mortar guards on frames for masonry walls
Wall Anchors	Below 7’ in Height - 4 anchors 7’ and above in Height - 5 anchors
Head Anchors	5’ and above in Width - 2 anchors
Bolts	As per specified by RMMI
Spreaders	Temporary spreader bars welded to the bottom of all three sided frames. To be removed before installation
Marking	Embossed with opening numbers above the middle hinge. In the jamb for continuous hinge frames
Finish	Thoroughly cleaned and coated with a rust inhibiting primer meeting requirements as per ANSI/SDI A250 10
Options	UL labeling requirements as specified
Shutter Frame Sizes	Min: 2’ 6” x4’ Max: 4’ x 9’
Door Frame Sizes	Min: 2’ 6” x 4’ Max: 8’ x 9’

Shutter Frames are manufactured as four sided frames

1400 FEMA Frames for Tornado Resistant Openings

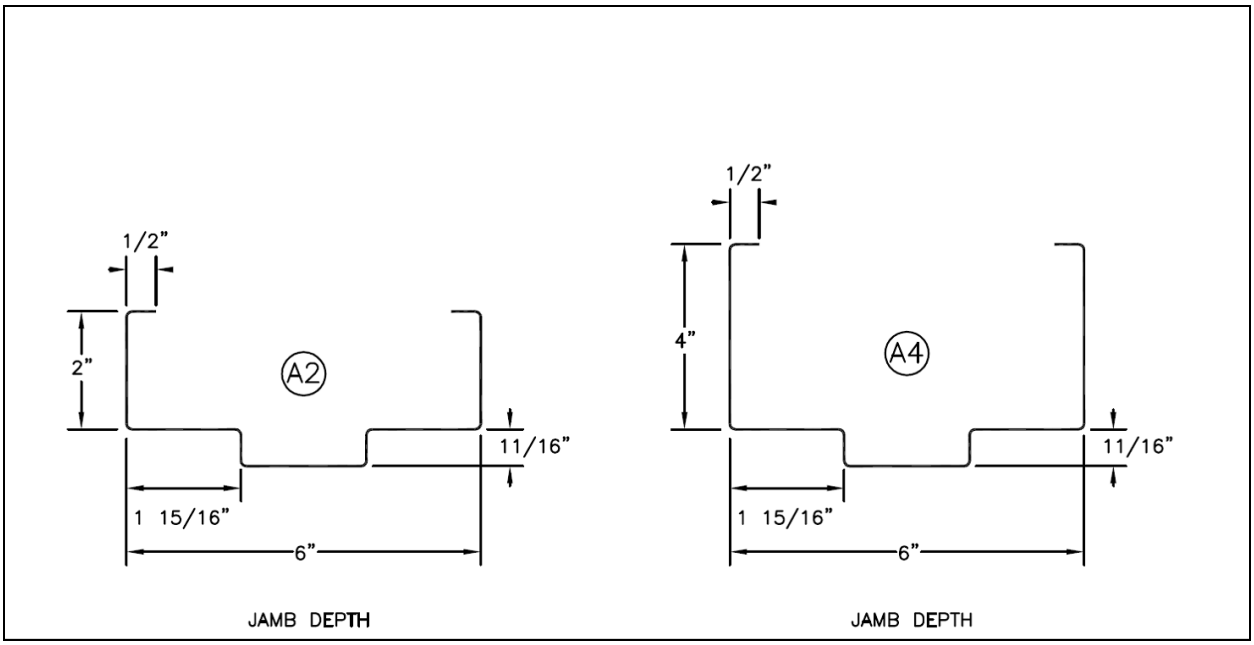

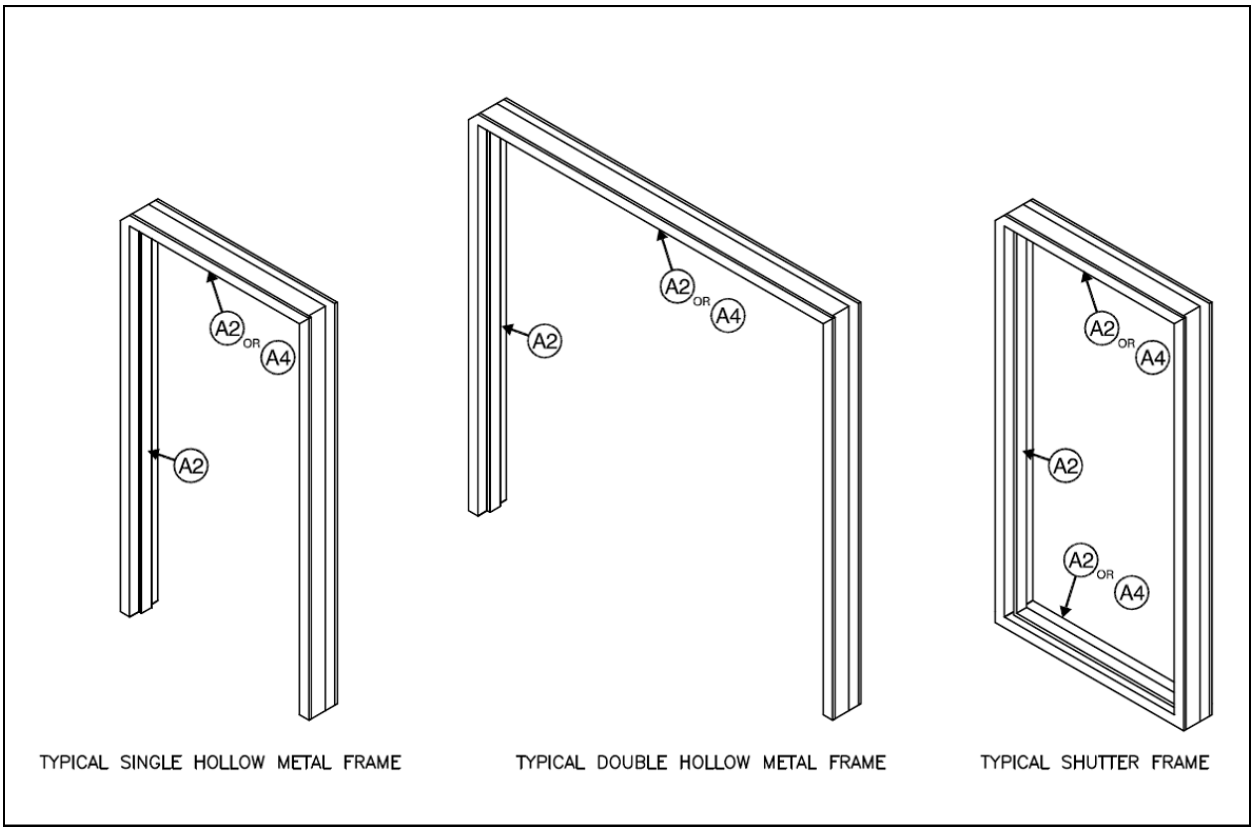

1400 FEMA Door/Shutter for Tornado Resistant Openings

Face Material	Galvannealed A40 or ASTM-A-653
Face thickness	14 Ga.
Construction	Hollow metal with 18 Ga. vertical steel stiffeners (ribs). Space insulated with glass wool insulation between ribs. Flush construction
Door thickness	1 3/4" Standard
Hardware Locations	Per Project Requirements
Reinforcements	7 Ga. 1 1/4" x 10" joggled hinge reinforcement, drilled and tapped 12 Ga. mortise hardware tabs, drilled and tapped 12 Ga. surface hardware and trim reinforcement
Edge reinforcement	Horizontal and vertical edges reinforced with 12 Ga. (min) full length channels spot welded to the face sheets
Vertical edges	Fully welded with no visible seam
Handing	Doors are handed
Appearance	Faces and edges free of defects, warp and buckle
Finish	Thoroughly cleaned and coated with a rust inhibiting primer meeting requirements as per ANSI/SDI A250.10
Options	UL Labeling requirements as specified

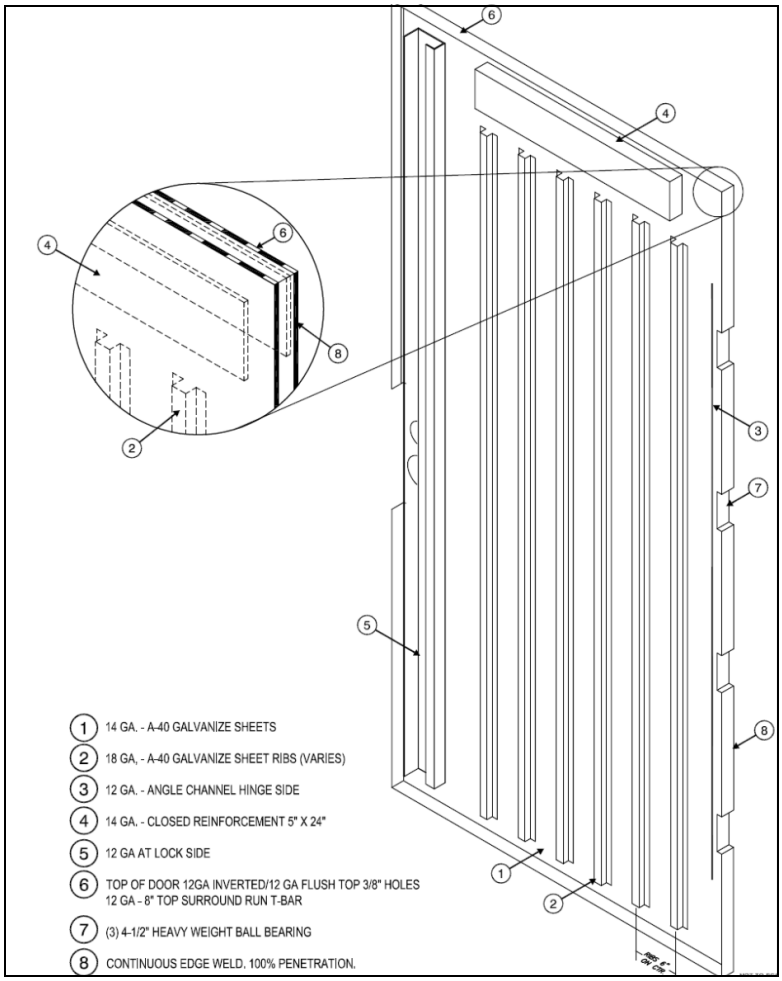

Leadership in Energy and Environmental Design (LEED)

LEED – The Leadership in Energy and Environmental Design Green Building System is the nationally accepted rating system for the design, construction and operation of sustainable and energy efficient buildings. The LEED Certification promotes a complete building system and focuses on five key areas of human and environmental health:

· Sustainable site development
· Water savings
· Energy efficiency
· Materials selection
· Indoor environmental quality

All products from Rocky Mountain Metals, Inc. qualify for LEED Credits as per below:

Full credit for recycled content MR.4.1 and 4.2 as Doors as well as Frames from Rocky Mountain Metals, Inc. contain more than 25% recycled material as per the LEED Definitions (100% of Post Consumer and 50% of Pre Consumer Recycled Content).

For further information about the requirements see below:

Credit	Requirement
Recycled Content MR 4.1	Use material with recycled content such that the sum of the post-consumer recycled content plus 50% of the pre-consumer content constitutes at least 10% of the total values of the material in the project
Recycled Content MR 4.2	Use material with recycled content such that the sum of the post-consumer recycled content plus 50% of the pre-consumer recycled content constitutes an additional 10% beyond MR 4.1 Credit (total 20%) based on cost of the total values of the material in the project
Regional Materials MR 5.1	Use a minimum of 20% of the combined value of construction and Division 12 materials and products that are manufactured (final assembly of components) within a radius of 500 miles.

Definitions:

Post-consumer recycled content – Waste material generated by households or by commercial, industrial or institutional facilities in their role as end-users of the product, which can no longer be used for its intended purposes.

Pre-consumer (post-industrial) recycled content – scraps left over during industrial or manufacturing processes, which are subsequently reused.

Contact Information

You can reach us at Rocky Mountain Metals, Inc.

Phone: 575.445.2756 **Fax:** 575.445.2804

Email
info@rockymountainmetals.com
sales@rockymountainmetals.com

Production / GM
Ron Gonzales rgonzales@rockymountainmetals.com

Sales and Estimating
Brittan Buchanan bbuchanan@rockymountainmetals.com
Jae Leavitt jleavitt@rockymountainmetals.com

Delivery and Billing
Melanie Wahl mwahl@rockymountainmetals.com

Engineering
Larry Whitish lwhitish@rockymountainmetals.com

You can also find us online at

CERTIFICATIONS

Read more at http://industries.ul.com/building-materials

BUY AMERICAN ACT

All Rocky Mountain Metals, Inc. standard and custom hollow metal frames and doors are manufactured in their New Mexico manufacturing plant from materials produced substantially in the United States and as such, meet the requirements of 41 U.S.C 10, commonly known as the Buy-American Act. In addition, all Rocky Mountain Metals, Inc. products meet the "Made in USA" standards set forth by the Federal Trade Commission (FTC) Act and Enforcement Policy Statement.

National Association of Architectural Metal Manufacturers

MEMBER

Rocky Mountain Metals, Inc.

140 Coal St. · P.O. Box 1101 · Raton, New Mexico 87740

Phone: 575.445.2756 · Fax: 575.445.2804

info@rockymountainmetals.com

www.rockymountainmetals.com